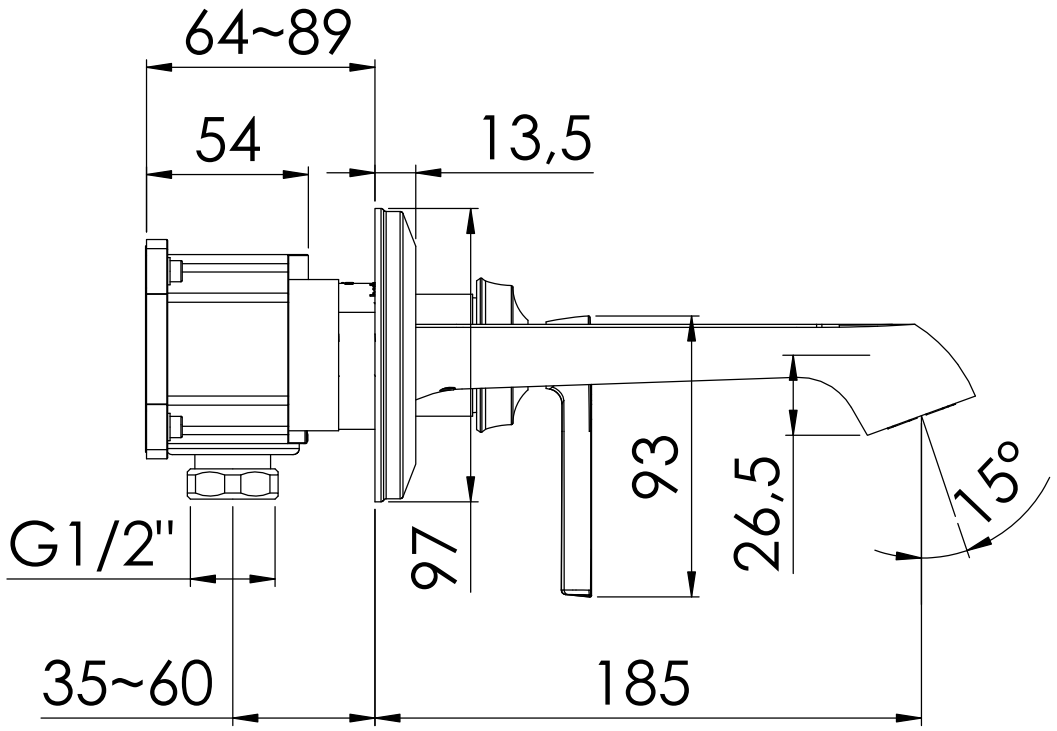

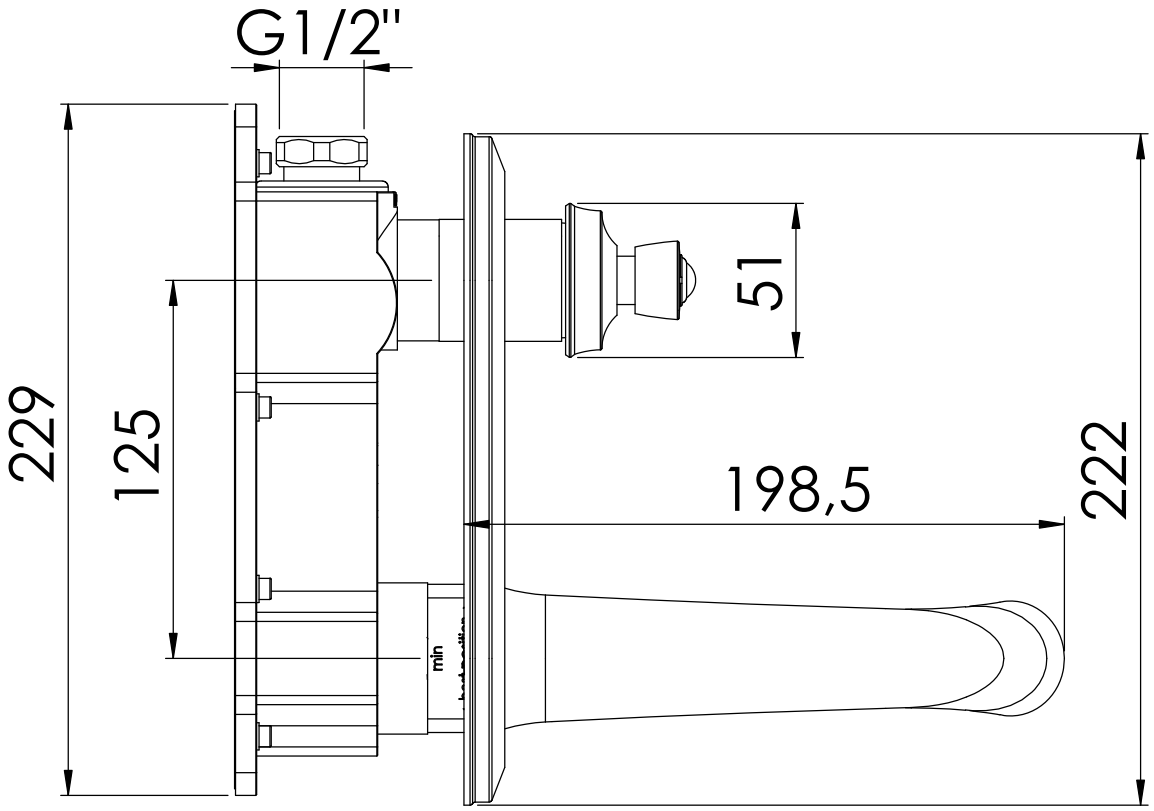

350 1854 3

STEINBERG